GALAHAD

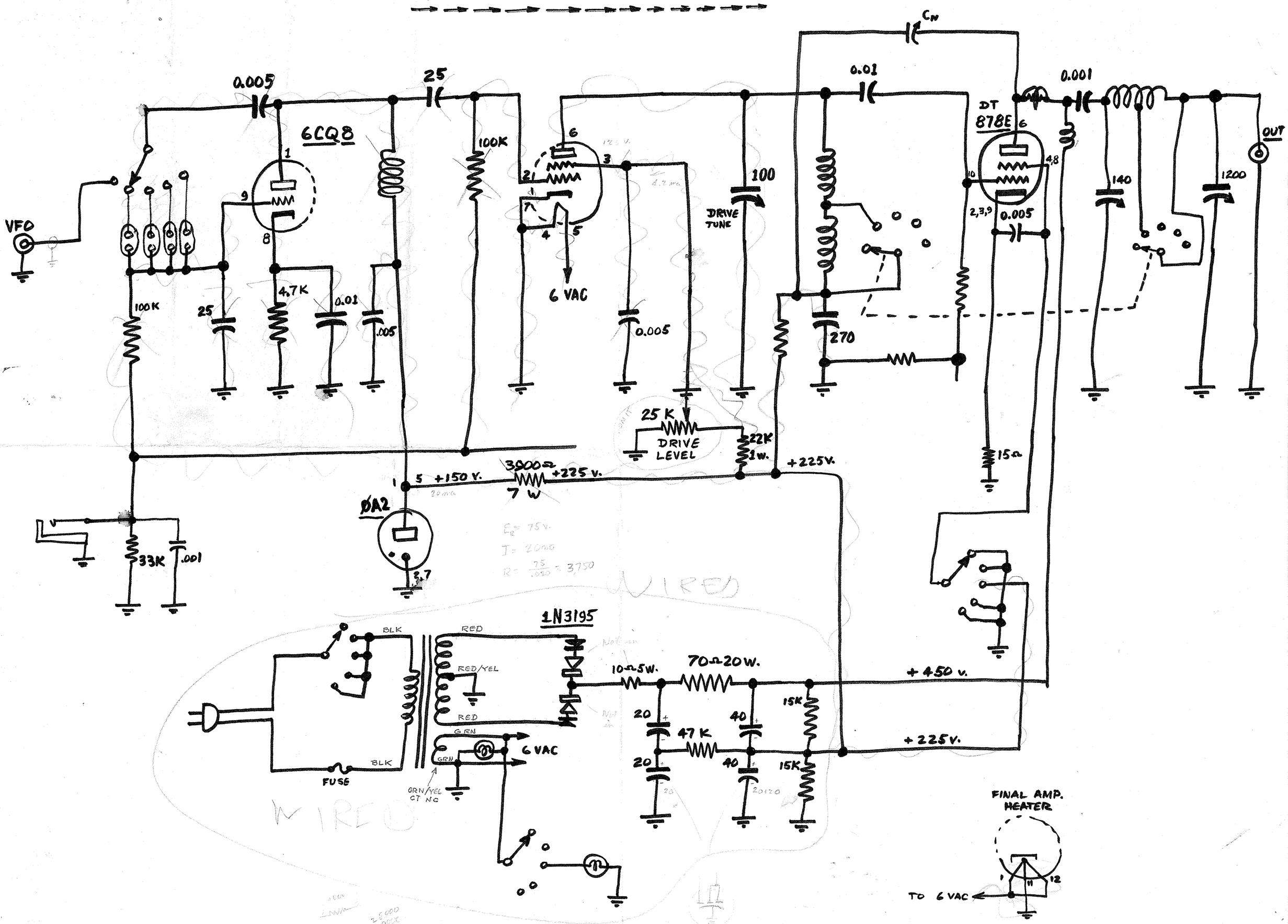

VFO
0.005
6CQ8
25
100K
100K
25
4.7K
0.01
.005
6 VAC
0.005
100
DRIVE TUNE
0.01
270
DT 878E
0.001
0.005
140
1200
OUT
25 K
DRIVE LEVEL
22K 1w.
+225V.
15Ω
+150 V.
3900Ω 7 W
+225 V.
ØA2
33K
.001
1N3195
BLK
RED
RED/YEL
RED
GRN
GRN
BLK
FUSE
GRN/YEL CT NC
6 VAC
10Ω 5W.
70Ω 20W.
+450 V.
20
47 K
40
15K
+225V.
FINAL AMP. HEATER
TO 6 VAC