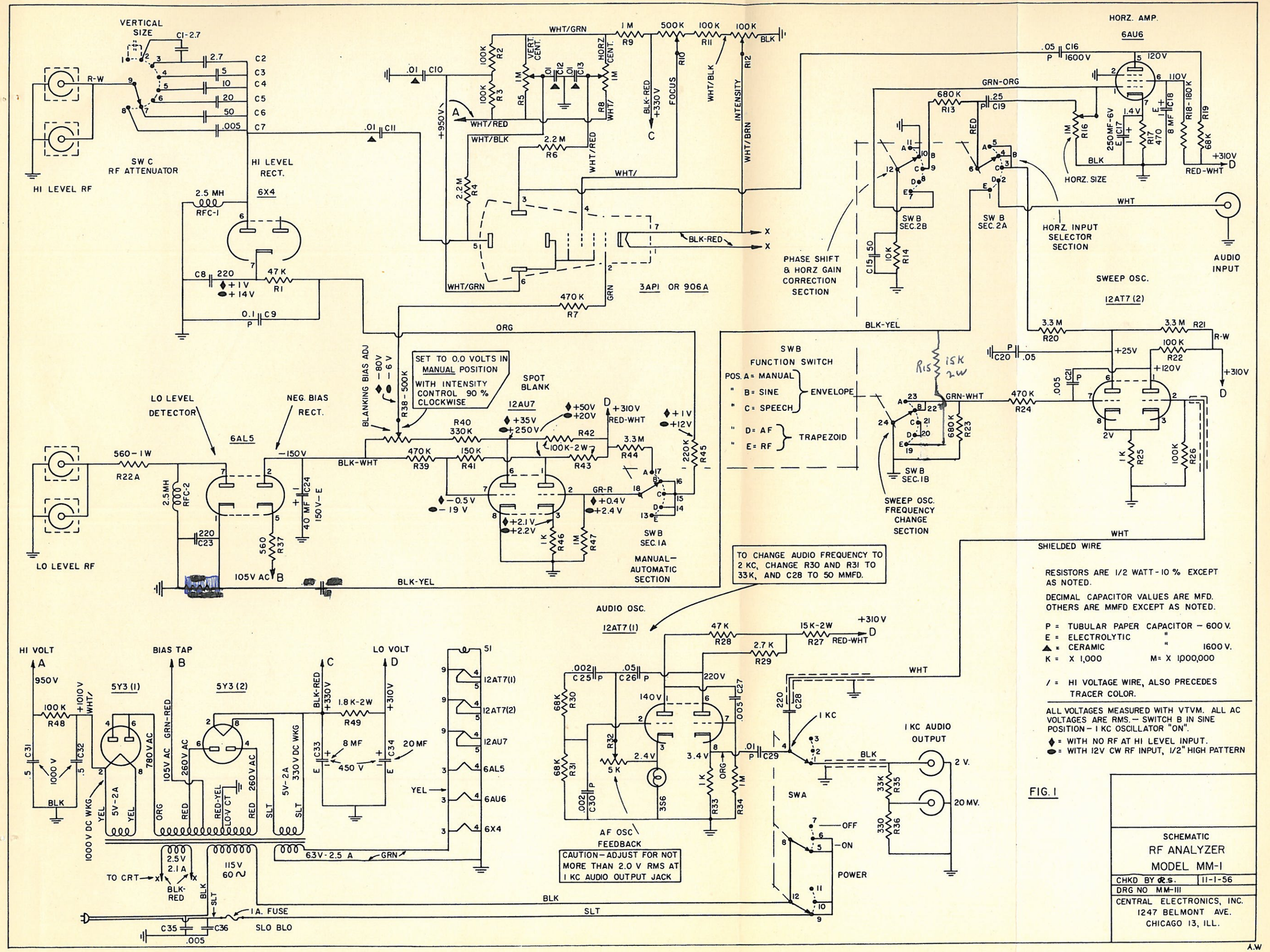
VERTICAL SIZE
SW C RF ATTENUATOR
HI LEVEL RF
HI LEVEL RECT.
6X4
3AP1 OR 906A
HORZ. AMP.
6AU6
HORZ. SIZE
HORZ. INPUT SELECTOR SECTION
AUDIO INPUT
SWEEP OSC.
12AT7 (2)
PHASE SHIFT & HORZ GAIN CORRECTION SECTION
SWB FUNCTION SWITCH
POS. A = MANUAL
" B = SINE
" C = SPEECH
ENVELOPE
" D = AF
" E = RF
TRAPEZOID
SWEEP OSC. FREQUENCY CHANGE SECTION
SHIELDED WIRE
SET TO 0.0 VOLTS IN MANUAL POSITION WITH INTENSITY CONTROL 90 % CLOCKWISE
SPOT BLANK
12AU7
BLANKING BIAS ADJ
LO LEVEL DETECTOR
NEG. BIAS RECT.
6AL5
LO LEVEL RF
105V AC
SW B SEC. 1A
MANUAL-AUTOMATIC SECTION
TO CHANGE AUDIO FREQUENCY TO 2 KC, CHANGE R30 AND R31 TO 33K, AND C28 TO 50 MMFD.
AUDIO OSC.
12AT7 (1)
HI VOLT
BIAS TAP
LO VOLT
5Y3 (1)
5Y3 (2)
1 KC AUDIO OUTPUT
2 V.
20 MV.
AF OSC FEEDBACK
CAUTION-ADJUST FOR NOT MORE THAN 2.0 V RMS AT 1 KC AUDIO OUTPUT JACK
POWER
TO CRT
1 A. FUSE
SLO BLO
RESISTORS ARE 1/2 WATT - 10 % EXCEPT AS NOTED.
DECIMAL CAPACITOR VALUES ARE MFD. OTHERS ARE MMFD EXCEPT AS NOTED.
P = TUBULAR PAPER CAPACITOR - 600 V.
E = ELECTROLYTIC "
▲ = CERAMIC " 1600 V.
K = X 1,000 M = X 1,000,000
/ = HI VOLTAGE WIRE, ALSO PRECEDES TRACER COLOR.
ALL VOLTAGES MEASURED WITH VTVM. ALL AC VOLTAGES ARE RMS. - SWITCH B IN SINE POSITION - 1 KC OSCILLATOR "ON".
♦ = WITH NO RF AT HI LEVEL INPUT.
● = WITH 12V CW RF INPUT, 1/2" HIGH PATTERN
SCHEMATIC
RF ANALYZER
MODEL MM-1
CHKD BY R.S.
11-1-56
DRG NO MM-111
CENTRAL ELECTRONICS, INC.
1247 BELMONT AVE.
CHICAGO 13, ILL.
A.W

FIG. 1